Round 4 - Sunday, May 30, 2021

SHOTLINK

Charles Schwab Challenge

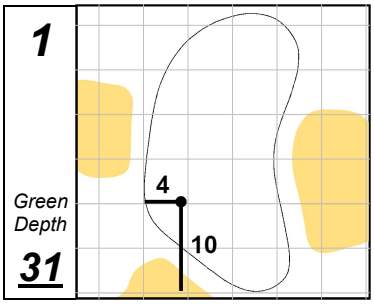

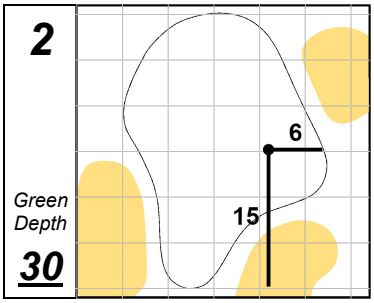

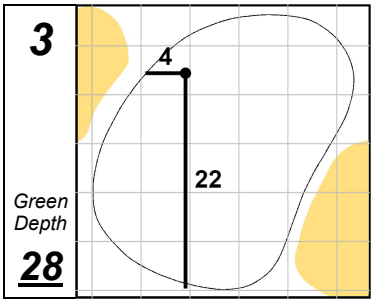

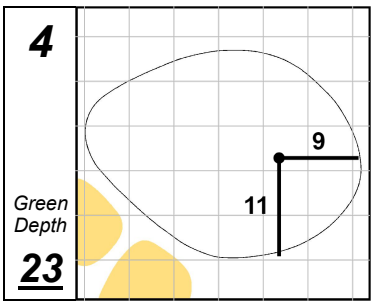

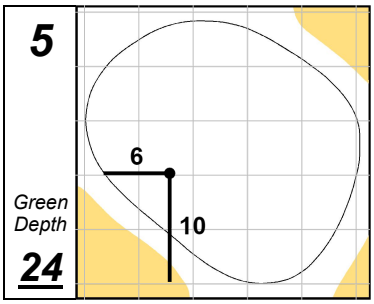

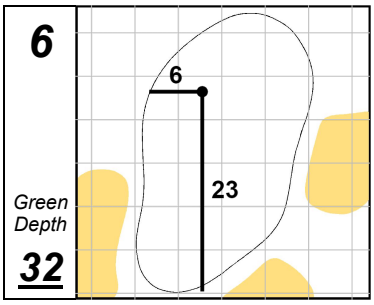

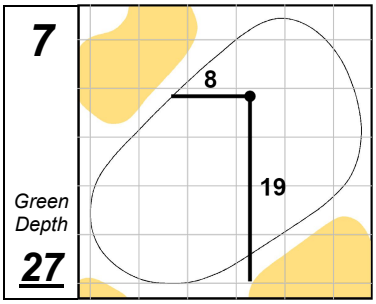

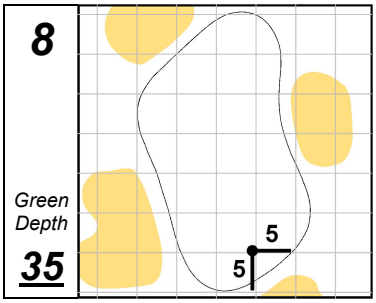

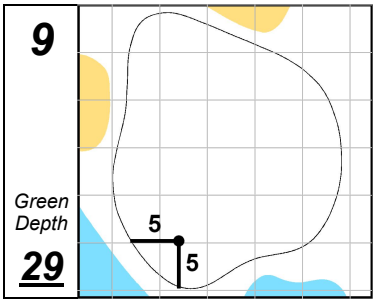

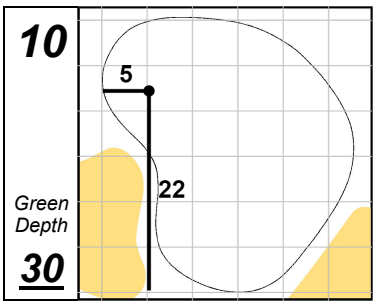

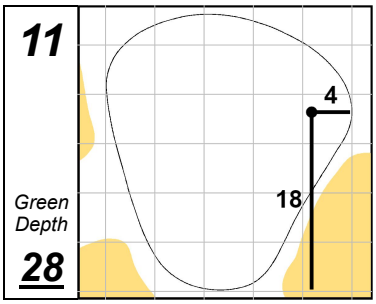

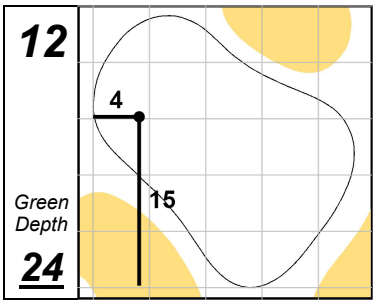

Colonial Country Club

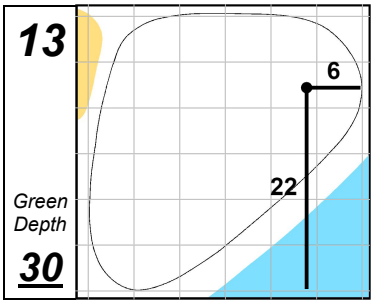

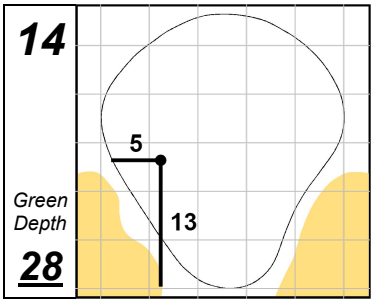

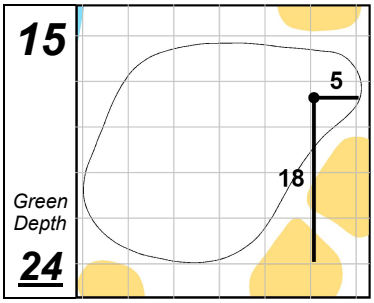

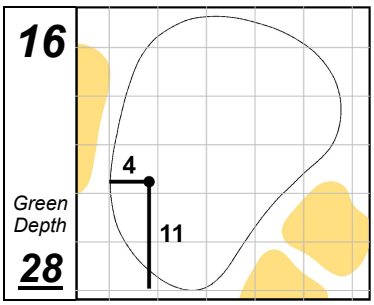

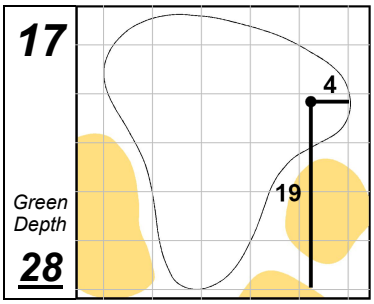

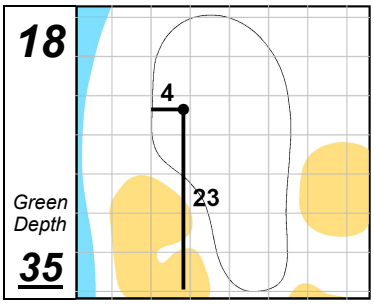

Each side of a complete square on the green represents 5 YARDS.

Saturday, May 29, 2021 2:46:43 PM